PROOF
DATE: 00-00-0000

8ft-3 Sided Table Throw

CUSTOMER: (YOUR COMPANY NAME)	WORK ORDER/PO#:	ART FILE NAME:
NAME	0000	File Name
QUANTITY	00	

Designer: __

Color Specs:

- CMYK
- Rich Black: c100, m100, y100, k100
- PMS _____ c
- PMS _____ c
- PMS _____ c
- PMS _____ c
- PMS _____ c
- PMS _____ c

Art Specs:

- ✓ *Layout, Vector Art, Raster Art & Colors OK*
- ✓ *Contains Low Resolution Raster Art*
- ✓ *Primary Art / Text Outside Safe Areas*

Safe Area — To avoid any logos or text from being cut off, keep all logos and text wihtin the blue dotted line.

Bleed Line

Before Submitting art, please ensure:

- *Raster images are high resolution - at least 150dpi at full scale*
- *All linked raster images are embedded*
- *All text is converted to vector outlines*
- *All Pantone colors are applied as Solid Coated (if applicable)*

Print Ready Art. I authorize and approve this art to be sent to production as is.

Need PROOF and 3D for customer

ALWAYS SEND A JPG RENDITION OF YOUR FILE TO VERIFY ART

****WARNING** DELETE TOP LAYER! DASHED LINES WILL PRINT!**

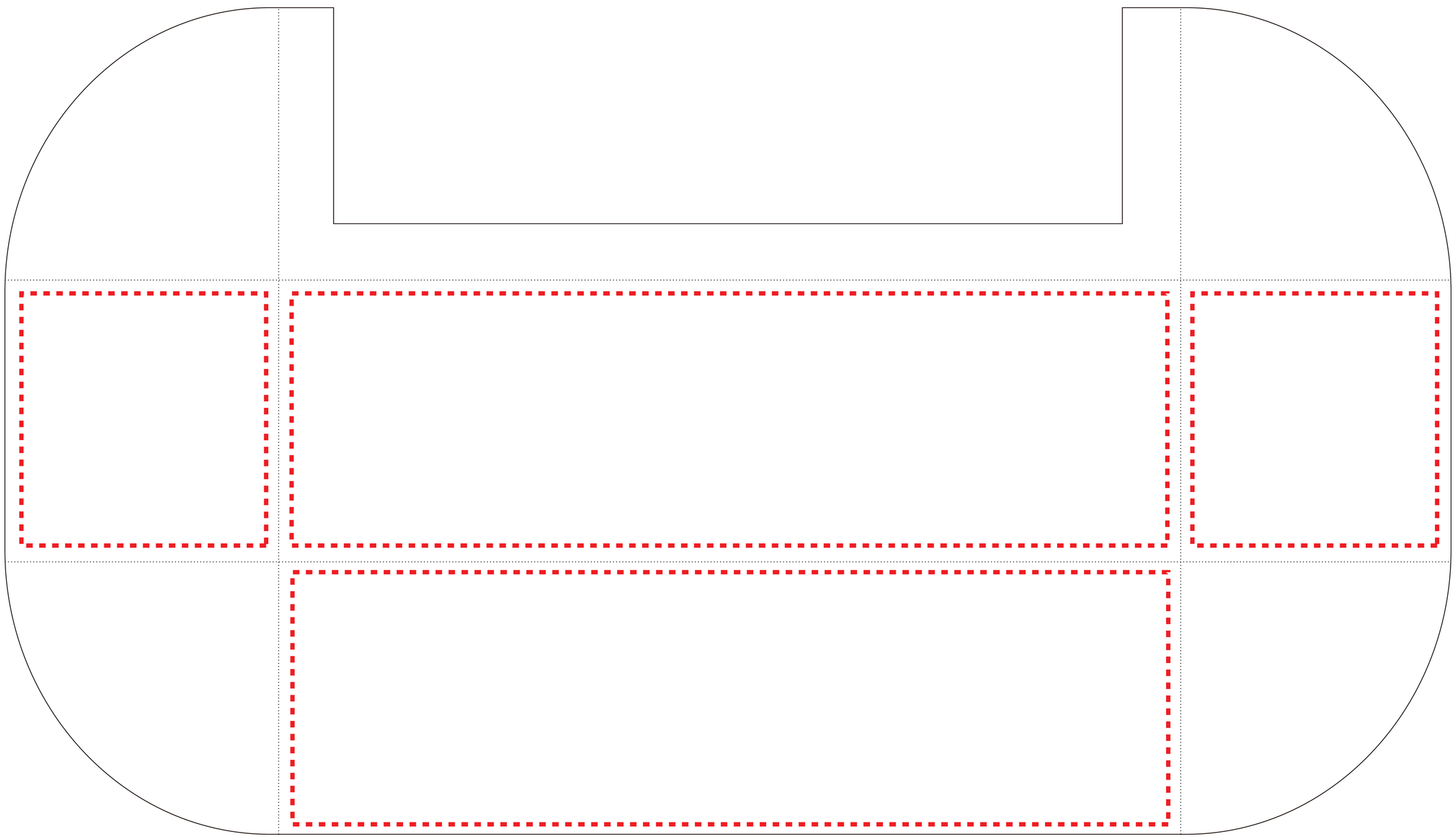
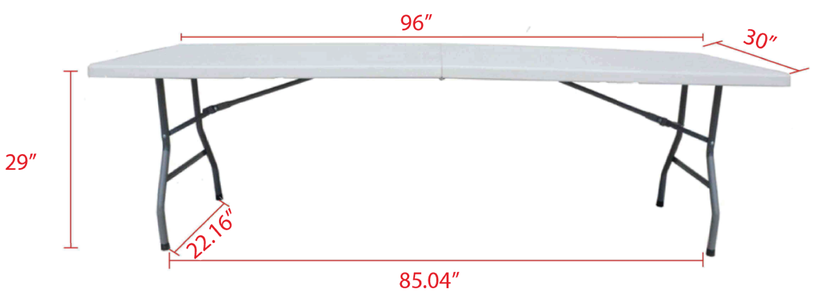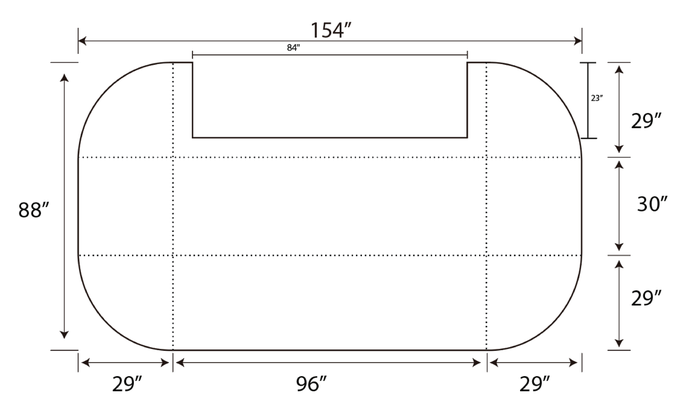
Table size:L96″XW30″XH29″
8ft Table