PROOF

DATE: 00-00-0000

8ft- 4 Sided Stretch Table Cover

CUSTOMER: (YOUR COMPANY NAME)	WORK ORDER/PO#:	ART FILE NAME:
NAME	0000	File Name
QUANTITY	00	

Designer: __

Color Specs:

- CMYK
- PMS _____ c
- PMS _____ c
- PMS _____ c

- Rich Black: c100, m100, y100, k100
- PMS _____ c
- PMS _____ c
- PMS _____ c

Art Specs:

- ✓ ☐ *Layout, Vector Art, Raster Art & Colors OK*
- ✓ ☐ *Contains Low Resolution Raster Art*
- ✓ ☐ *Primary Art / Text Outside Safe Areas*

Safe Area — — — —
To avoid any logos or text from being cut off, keep all logos and text wihtin the blue dotted line.

Bleed Line ———

Before Submitting art, please ensure:

- *Raster images are high resolution - at least 150dpi at full scale*
- *All linked raster images are embedded*
- *All text is converted to vector outlines*
- *All Pantone colors are applied as Solid Coated (if applicable)*

☐ Print Ready Art. I authorize and approve this art to be sent to production as is.

☐ Need PROOF and 3D for customer

ALWAYS SEND A JPG RENDITION OF YOUR FILE TO VERIFY ART

****WARNING** DELETE TOP LAYER! DASHED LINES WILL PRINT!**

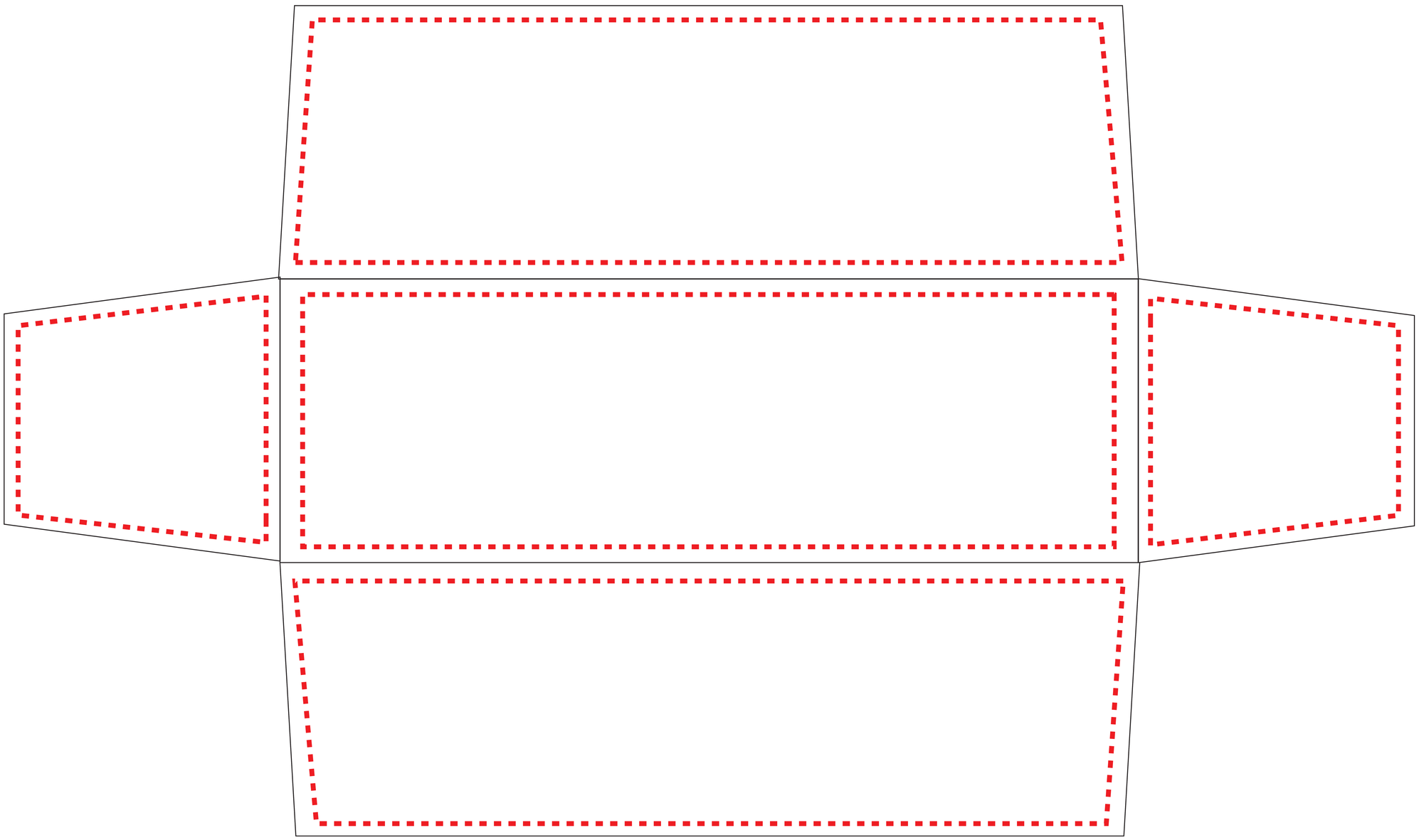

Table size:L96″XW30″XH29″
8ft Table

8ft Stretch Table Cover

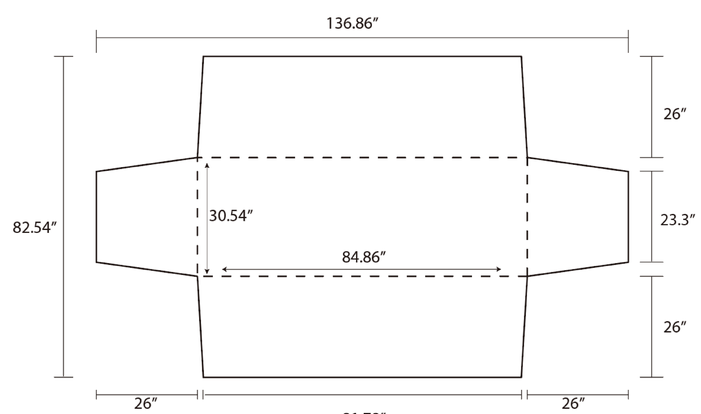
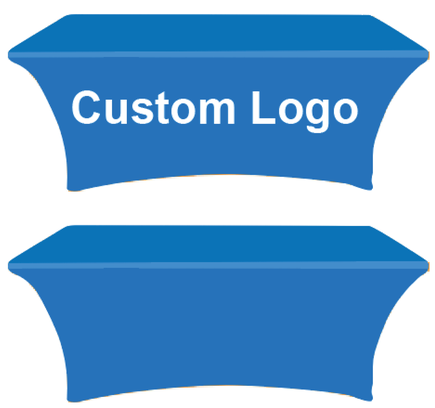
Stretch Table cover